Syropy AI Connectivity

The terminal box also requires a patch panel

The terminal box also requires a patch panel

What Is a Patch Panel and Why Do You Need It?

Copper patch panel, also called ethernet patch panel or RJ45 Patch Panel, is designed for both shielded and unshielded copper cables like Cat5e, Cat6, Cat6a and Cat7. This copper patch

What is Patch Panel and Types

This post provides a detailed introduction to patch panels, their main types, features, and several featured Gcabling copper and fiber patch panels.

Types of FS Ethernet Patch Panels Explained: Punch

This guide explains three copper Ethernet patch panel types--punch down, feed-through, and blank keystone--to help simplify structured cabling

What Is The Difference Between Fiber Optic Patch Panel And Fiber

1.1 What Is a Fiber Optic Patch Panel? Fiber Optic Patch Panel A fiber optic patch panel (also known as fiber distribution panel, fiber patch bay, optical distribution frame or ODF in larger

Patch Panels Explained: Types, Benefits, and How They Work

Learn what a patch panel is, how it works, and why it's essential for modern structured cabling--improving cable management, scalability, and network performance.

Punch Down, Feed-Through, and Toolless Keystone

Chances are, if an Ethernet installation involves more than one or two cable drops, it's also going to involve the use of a patch panel. A patch panel

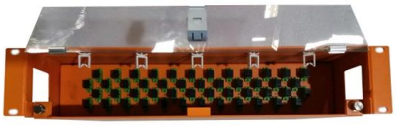

What Does a Patch Panel Do? Network Cabling Essentials

A patch panel (sometimes called a patch bay or patch field) is a hardware assembly containing multiple network ports. It serves as the central

All You Need to Know about Punch Down Blocks: The

A punch down block, also known as a terminal block or patch panel, is a crucial component in telecommunication and data networking systems. It is

Patch Panel: What it is and Why Do you need it?

The patch panel functions as an intermediary between the network devices and the cables. When a network device is connected to a patch panel

Fiber Patch Panels: A Beginner's Guide

Rack mount fiber patch panels will typically specify how many rack units it will occupy when installed. The more rack units it occupies the more fiber the patch panel will typically accommodate. Wall

What is a Patch Panel and What Is Its Purpose? - FireFold

These days, it seems that just about everything is wireless. But to take advantage of the blazingly fast Internet now available in most homes and businesses, a wired

What Is A Patch Panel?

A patch panel is a piece of networking hardware that contains multiple ports to connect different Ethernet cables. Patch panels allow you to label

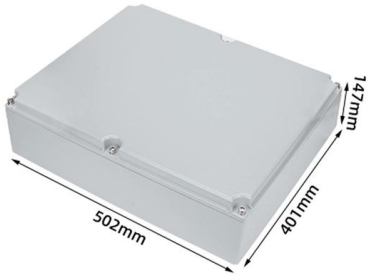

Ethernet Patch Panel: Complete Guide to Structured

Discover what an Ethernet patch panel is, how it works in structured cabling, and how it compares to a switch. Learn about Cat6 vs Cat8, installation

What is a Patch Panel?

Learn what patch panels are and the different types, as well as how they keep large numbers of cables organized in a data center.

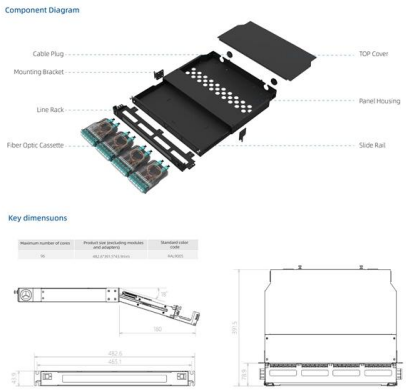

Complete Guide to Patch Panels: Types, Benefits, and

Discover everything you need to know about patch panels, including different types, their benefits, and installation tips. Enhance your network

What is a Patch Panel?

Patch panels work by connecting cables through its RJ45 connectors and IDC terminal blocks to reach from one port to the next. Network and Ethernet

Patch Panels: A Complete Guide

What Is A Patch Panel?Components of A Patch PanelPatch Panel vs. SwitchBuying A Patch PanelTo buy the right patch panel for your needs, you first need to know what those needs are. How many connections do you need to support with your patch panel? Does it need to be a twisted pair, fiber optic, or coaxial panel - or even one that can do all three? Does it need to be rack mounted in a wire cabinet for further expansion down the line, or l See more on cablematters dtechcables

What is a Patch Panel: Why They Matter and How to Choose

A patch panel is one of those components that is easy to overlook when planning a network -- it does not switch, route, or process data, and to the uninitiated it can look like an expensive way to add an

Comprehensive Guide to Network Patch Panel & Keystone Jack

Learn the step-by-step network patch panel and keystone jack wiring methods, including essential tools, T568A/B wiring sequences, and tool-free installation tips.

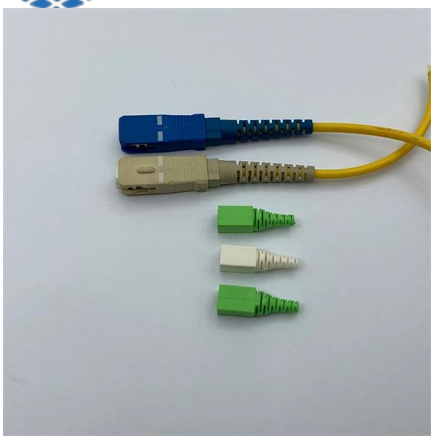

Patch Panels and Patch Cables Explained

This tutorial explains patch panels and patch cables in detail. Learn what patch panels and cables are and how they work in a computer network.

Fiber Optic Patch Panel

A well-installed fiber optic patch panel will keep your network running smoothly and efficiently, supporting your business operations for years to come. Ready to optimize your network with a fiber

What Is A Patch Panel?

Unlock the secrets of patch panels in networking; learn about what is a patch panel, their crucial role in cable management, the benefits of using patch panels, and

The Ultimate User Guide to Fiber Patch Panel

Fiber patch panels play an increasingly important role in the optical fiber network due to the widespread use of high-density cabling systems in data

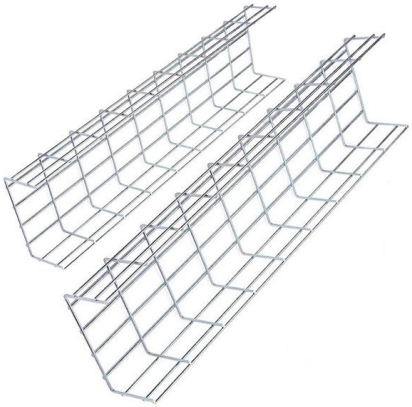

How does a patch panel work?

Installation of a patch panel requires careful planning to ensure optimal cable organization. A patch panel works by centralizing network connections in a single location.

What is Patch Panel in Networking and How to Use It?

The patch panel is a networking device with multiple ports that is used to manage cables. It is essential for structured cabling systems, allowing

Why Need fiber optic patch panel & Fiber optic

Why Need fiber optic patch panel & Fiber optic termination box in the network? Fiber optic termination box Fiber optic termination box, also known as a

Fiber Patch Panel: An Ultimate Guide

Fiber patch panels work by providing a centralized location for terminating, splicing, and organizing fiber optic cables. Cables are connected to

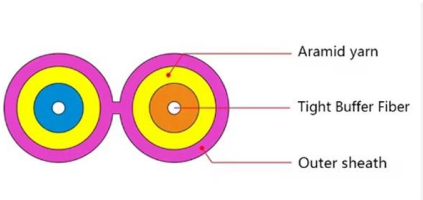

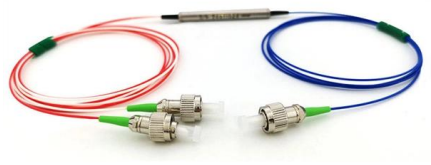

Patch Panels: A Complete Guide

Patch Panel Features The final factor to consider when purchasing a patch panel is what additional features it comes with; Not all patch panels are

Contact Us

For datasheets, pricing, or custom high-speed optical interconnect solutions, please visit:
https://www.syropy.com.pl