Syropy AI Connectivity

Tajikistan SFP Optical Switch Distributor

Tajikistan SFP Optical Switch Distributor

Fiber,optical,cable Buyers & Importers in Tajikistan

Connect 1,300 Active Fiber,optical,cable Buyers in Tajikistan based on import shipments till May-25 with details of Contact numbers, Qty, Current Pricing & Suppliers.

Sales Offices and Distributors , Allegro MicroSystems

Allegro MicroSystems partners with a worldwide network of sales offices, manufacturer's representatives, and authorized distributors to bring our

Latif Llc , Tajikistan

CWDM, DWDM, FWDM, SFP transceiver, Optic Circulators, Optic Isolator, Optica Switches

Tajikistan JQ-LW100-LR4I 100G QSFP28 LR4 1310nm 10km DOM

JIAXUN JQ-LW100-LR4I 100G QSFP28 LR4 DOM Duplex LC Optical Transceiver Module (SMF, 1310nm, 10km, DOM, Industrial) The JQ-LW100-LR4I QSFP28 module provides 100GBase-LR4

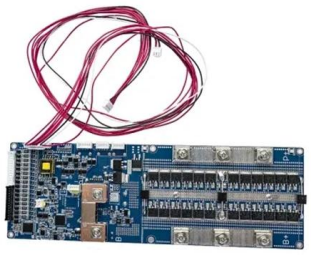

Tajikistan JQ-LW100L-ER4C 100G QSFP28 ER4 1310nm 40km DOM

JIAXUN JQ-LW100L-ER4C 100G ER4 QSFP28 Duplex LC/UPC Optical Transceiver Module (SMF, 1310nm, 40km, DOM) JIAXUN JQ-LW100-ER4C QSFP28 Optical Transceiver Module is designed

Tajikistan Optical Transceiver Market (2025-2031) , Analysis & Value

Tajikistan Optical Transceiver Market Government Policies The Tajikistan government has implemented various policies to support the growth of the Optical Transceiver Market in the country. These

Fiber Switch

Get the most advanced fiber switch at Hummingbird Networks. A fiber or optical switch can withstand demanding optical applications.

TARMOC , SFP,Fiber Accessories,Switch,Media Converter

Founded in 2017, TARMOC is a global provider of reliable networking devices, Fiber, and accessories. TARMOC is involved in all aspects of everyday ISP life. The company has been supplying

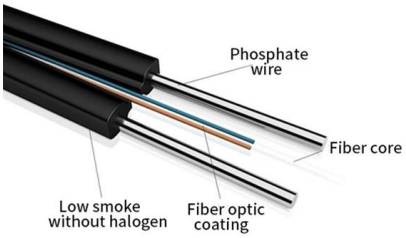

Latest Russia Fiber optic cables Export Data to Tajikistan

Get latest Russia Fiber optic cables Export Data to Tajikistan. Find year-wise Russia exports to Tajikistan and discover genuine buyers & suppliers from Russia.

Top Fiber Optic Transceiver Suppliers In Europe: A Procurement

Introduction Selecting a European optical transceivers supplier isn't just about price. Enterprise and carrier buyers must balance interoperability (Cisco/Juniper/Arista), firmware profiles, warranties,

Top 5 Sfp Module Manufacturers In The U.S. For Enterprise Buyers

Their documented SFP/SFP+ product pages and ecosystem focus make them a safe choice when you want tight hardware/firmware integration and predictable performance. Best for:

List of Switch Companies in Tajikistan

List of Switch Companies in Tajikistan, Suppliers, Distributors, Manufacturers, Importer. Include Unique Tech LLC, .

25G SFP28 LR for HPE H3C JL855A H3C Tajikistan , Ubuy

Shop 25G SFP28 LR for HPE H3C JL855A H3C SFP-25G-LR-SM1310 25GBASE-LR SFP28 1310nm 10km DOM Duplex LC SMF Optical Transceiver Module online at a best price in Tajikistan.

8 Port Fiber Switch 10/100/1000M RJ45 and 2-port

This switch provides 8-port 10/100/1000M RJ45 and 2-port 1000M SFP fiber ports. Users may need to use different SFP modules, such as 1000Base-T, 1000Base

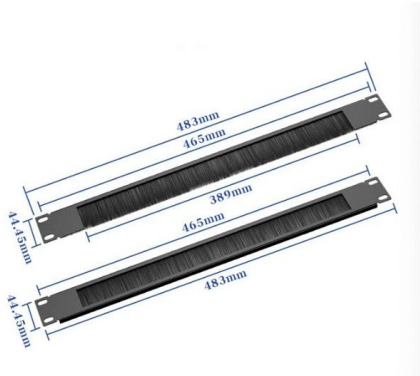

Tajikistan Electrical Switches Market (2022-2028) , Trends, Outlook

Tajikistan Electrical Switches Market Synopsis The electrical switches market in Tajikistan is expected to witness a healthy growth over the forecast period, owing to increasing investments from both public

Best Fs Alternative For Optical Transceivers: Why Distributors

Searching for an best FS alternative for optical transceivers? We compare the Retailer Model vs. Factory Direct. Discover how sourcing wholesale SFP/QSFP modules from Wolontek offers 50%

Ethernet Switch And Sfp Optical Transceiver

Trader - Wholesaler / Distributor of Ethernet Switch And Sfp Optical Transceiver - Intel Sfp Fibre Optic Transmitters, E10GSFPSR offered by Gtek Electricals &

Partner Locator

Official Cisco Partner Locator - Find certified Cisco partners, resellers, and integrators near you. Search by location, specialization, and services to connect with authorized Cisco solution providers worldwide.

Tajikistan Ciena Compatible 10G SFP+ (1550nm,100km,LC SMF,DOM

Designed for low-power (1.5W) operation, high-density deployment, and stable 10G performance, the SFP+ optical transceiver provides an efficient solution for upgrading data center networks.

Tajikistan 10/25/100G SFP Modules-City Product Center-JIAXUN

JIAXUN City Product Center Jiaxun (Huizhou) Intelligent Technology Co., Ltd. Mainly Focuses on LAN Transformers, Filters, RJ45 Ethernet Connector,Optical Transceivers,SFP Module,SFP Cage, And

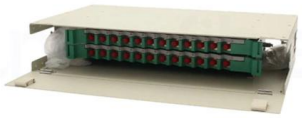

Latif Llc , Tajikistan

Fiber Optic, Optical Fiber, Fiber Cable, Optical Fiber Cable, Plastic Optical Fiber, Patch Cord, Fiber Optic Patch Cord, Distribution Box, Fast Connector, Terminal Box, Patch Panel, Media Converter,

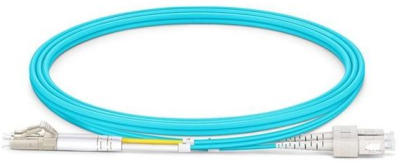

Tajikistan 10/25/100G SFP Modules-City Product Center-JIAXUN

JIAXUN JQ-LW100-ER4C QSFP28 Optical Transceiver Module is designed for use in 100GBASE Ethernet throughput up to 40km over single mode fiber (SMF) using a wavelength of 1310nm via

10G SFP+ Optical Transceivers , Transceiver Module

FS 10GbE SFP+ module solutions provide a wide variety of 10 Gigabit Ethernet connectivity options for data centers, enterprise wiring closets, Internet Service

Cisco Dealer In Tajikistan , HPE Aruba Switch , Juniper Networks

Best HPE Aruba Distributor In Tajikistan, We Offer Browse our complete range of IT and Networking Solutions - Cisco, Cisco Switch, Cisco Router, Cisco Firewall, Cisco Spares, Cisco Refurbished

Tajikistan Optical Communication and Networking Equipment Market

Historical Data and Forecast of Tajikistan Optical Communication and Networking Equipment Market Revenues & Volume By Greater Than 40 Gbps To 100 Gbps for the Period 2020 - 2030

Tajikistan Optical Transceiver Market (2025-2031) , Analysis & Value

Overall, the Tajikistan Optical Transceiver market presents lucrative opportunities for vendors to capitalize on the growing demand for high-speed data transmission solutions in the country.

Buy 10G SFP+ LR 10GBASE-LR Optical Transceiver Module

We can deliver the 10G SFP+ LR 10GBASE-LR Optical Transceiver Module Compatible for HPE Aruba J9151D J9151E JL749A J9151ECM ProCurve J9151A 1310nm 10km DDM Duplex LC SMF speedily

Tajikistan Optical Network Equipment Market (2025-2031) , Trends

6Wresearch actively monitors the Tajikistan Optical Network Equipment Market and publishes its comprehensive annual report, highlighting emerging trends, growth drivers, revenue analysis, and

Cisco SFP-10G-T-X In Tajikistan Manufacturers Suppliers

We are the top Cisco SFP-10G-T-X Wholesaler, Suppliers, Dealer, and Exporters in Tajikistan, and we can take care of all your delivery-related problems just by giving you a call.

Contact Us

For datasheets, pricing, or custom high-speed optical interconnect solutions, please visit:
https://www.syropy.com.pl