Syropy AI Connectivity

Qatar Solution Large Core Fiber OM3

Qatar Solution Large Core Fiber OM3

An Introduction to Large Core Optical Fibers

You may recognize these types of fibers by industry specifications such as OM2, OM3, and OM4 or by brand names like Corning® ClearCurve® and OFS®

Fiber Optic Solutions in Qatar , Network Cabling

Premier Infotech delivers fully certified fiber optic solutions in Qatar designed for fast, reliable, and scalable network performance. As part of our Structured Cabling

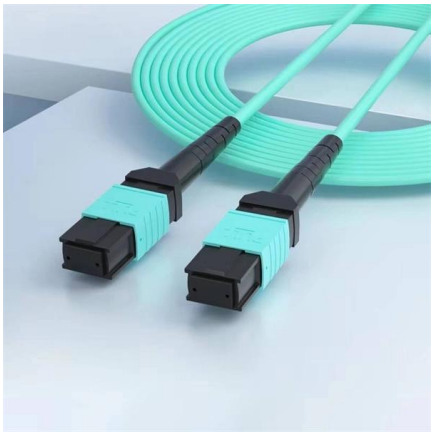

Top16 Fiber Optic Cable Suppliers in Qatar

As Qatar continues to advance its infrastructure, the demand for reliable fiber optic solutions has surged. This article introduces some of the

Multimode Fiber: Differences Between OM1, OM2, OM3,

Discover the key differences between OM1, OM2, OM3, OM4, and OM5 multimode fibers. This guide covers core sizes, bandwidth capabilities, and

Multimode fiber: OM1 vs OM2 vs OM3 vs OM4

Comparison of parameters and specifications of OM1, OM2, OM3 and OM4 optical fibers OM1 refers to 50 um or 62.5 um core diameter multimode fiber

Multimode Optical Fiber

Multimode optical fibers have larger cores that guide many modes simultaneously. The larger core makes it much easier to capture light from a transceiver, allowing source costs to be controlled.

OM2 Opti OM3 OM4 Multimode TR2 042214

TR2 TECHNICAL INFORMATION Panduit OM2 and laser-optimized OM3, OM4 and Signature CoreTM multimode fibers exceed domestic and international standards for optical fiber, including

OM3 Multi Mode Fiber Optic Cables ,

In the OM3 Multi Mode Fiber Cables category, we provide a wide range of products from 4 Core to 96 Core. Additionally, we fulfill your custom fiber cable requests.

Multimode Optical Fiber Selection & Specification

TIA/EIA-492AAAD: "Detail Specification for 850-nm Laser-Optimized 50-?m Core Diameter/125-?m Cladding Diameter Class Ia Graded-Index Multimode Optical Fibers Suitable for Manufacturing OM4

Understanding the Differences: OM1 vs OM2 vs OM3 vs

Light Optics: Difference Between Multimode Fiber Types: OM1 vs OM2 vs OM3 vs OM4 vs OM5 - Highlights the differences between the

Understanding the Differences Between OM4 and OM5

The drawback is that step-index fiber supports a high number of modes and, hence, introduces large amounts of modal dispersion. To reduce

OM3 vs OM4 Fiber: Differences, Speeds, and Use Cases

For example, connecting OM3 to OM4 will yield OM3-level performance. Use Cases OM3 Fiber: Best for small to medium data centers, short backbone links, and 10 Gbps to 40 Gbps connections within

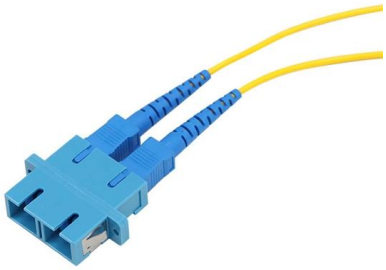

Dconnect 12 Core Multimode OM3 Fiber Optic Armored cable

Dconnect 12 core Multimode OM3 fiber optic Armored cable Corrugated steel tape CLT fiber optic cable with upto 24 x 250um fibers within a gel filled central tube with water blocking glass yarns. Inner

TMT Global 8CORE MULTI MODE

TMT Global 8CORE MULTI MODE INDOOR/OUTDOOR ARMOURED FIBER OPTIC CABLE OM3 TMT-3231 Supplier in Doha Qatar TMT GLOBAL provides

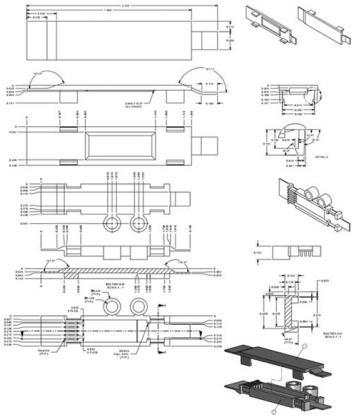

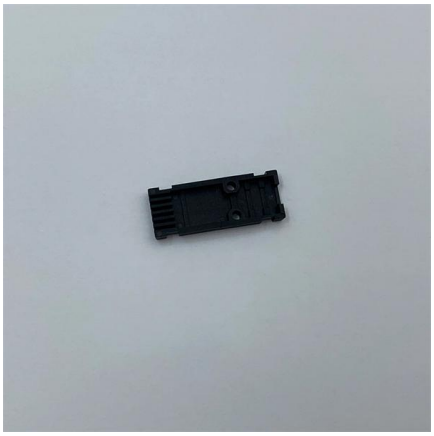

OM1 vs OM3 Fiber: Key Differences in Performance and Applications

Discover the key differences between OM1 and OM3 multimode fiber optic cables for high-speed networks. Compare core sizes, data transmission speeds, and optimal applications to choose

Fiber Optic cable Distributor and Supplier in Doha Qatar

We supply fiber optic cables in multiple cores ranging from 2 core to 96 cores. We offer all types of indoor and outdoor (armored and non-armored) fiber optic cables

Multimode Fiber: OM1 to OM5 - MapYourTech

What is Multimode Fiber? Multimode fiber is an optical fiber designed with a larger core diameter (typically 50 or 62.5 micrometers) that allows multiple

OM1 vs OM2 vs OM3 vs OM4 vs OM5 Multimode Fiber

In 2003, the OM3 fiber type was standardized and is closely linked to the IEEE 802.3 10GbE Ethernet standard. It has a core diameter of 50 µm and a

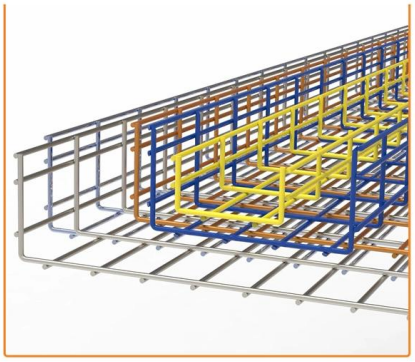

What is OM3 Multimode Fiber?

Multimode fiber is an optical fiber with a large core size, enabling multiple light modes to propagate simultaneously. This fiber type is commonly

Multimode Fiber Standards Guide: OM1 OM2 OM3 OM4

In today's information age, fiber-optic communication--known for high speed and large bandwidth--has become the backbone of modern networks.

LoRa handheld portable base station

Multimode fiber standards: OM1, OM2, OM3, OM4, and OM5

We took a closer look at the technical specifications, performance characteristics, and application scenarios of OM1, OM2, OM3, OM4, and OM5 multimode fibers. From the basic

Techlogiks 8 Core Multimode Om3 Unarmored Fiber Optic Cable

8 Core Multimode Om3 Unarmored Fiber Optic Cable Techlogiks loose tube cables are the product of choice as the backbone in Indoor/Outdoor environments. Optical Fibers are placed inside filled buffer

OM3 Multi Mode Fiber Optic Cables ,

Fiber4u meets your needs in large network applications with OM3 Fiber Cable solutions that offer high data speeds and performance. With a core diameter of 50/125 µm, OM3 fiber cables allow data

OM3 vs OM4 Fiber Optic Cables: Key Differences Explained

OM4 is another multimode fiber option, and in most cases, it also uses an aqua jacket (some companies use a purple jacket to distinguish it from OM3). This is another fiber cable with a 50-micrometer core,

Multimode Fiber Types: OM1 vs OM2 vs OM3 vs OM4

A complete guide to multimode fiber types OM1, OM2, OM3, OM4, and OM5. Compare speed, distance, bandwidth, and applications, and learn how

OM3 And OM4 Fiber Cable for 10G/40G/100G Network

The OM3 fiber spec indicates that OM3 fiber is mainly designed for 10 Gb/s transmission speed, but it also can run under 40 Gb/s and 100 Gb/s. As an

OM3 vs OM4 Fibers: Choosing the Right MPO Cable for 100Gb Data

Fiber Optic Basics MPO cables, also known as multi-fiber push-on cables, are indispensable for facilitating high-speed data transmission in modern networking environments.

Fiber Optic Cable

Our main success is the fiber optic cables we supply are genuine and our sales team could provide proper information about fiber cables to our clients and can deliver

10 companies for Fiber Optic Cable Manufacturing in Qatar

Discover all relevant Fiber Optic Cable Manufacturing Companies in Qatar, including Fiber Dyne Qatar Technologies and Tier3 Distribution

Contact Us

For datasheets, pricing, or custom high-speed optical interconnect solutions, please visit:
https://www.syropy.com.pl