Syropy AI Connectivity

Precautions for grinding fiber optic cables and pigtails

Overview

These shards are hard to see and can be dangerous if they touch your eyes or skin. ND ACCE es conform to the guidelines expressed in the American National Standards Institute document (ANSI Z535) for hazard alert messages. Alerts are included in this instru d ath or serious i jury ectacles) conforming to ANSI Z87, for eye protection from accidental injury wh n ha dling. All optical fibers cables are sensitive to damage during handling & installation. Introduction This Program provides supervision, employees and safety managers with general safety rules, task safety procedures and best techniques for installation of quality fiber optic cable systems (cable handling, splicing, pulling, terminating testing and trouble shooting tasks). Here are 5 vital rules for staying safe when you're working on fiber optic cables. As such, to ensure that fiber optic cables or FORJs can yield the best possible results of the FO performance it's of great significance for engineers and operators to keep in mind how to handle optical fibers or cables.

Precautions for grinding fiber optic cables and pigtails

What is a Fiber Optic Pigtail, and What Is It Used For?

Discover the essentials of fiber optic pigtails, including types, uses, and installation procedures to ensure smooth network operations in data and

SAFETY: FIBER HANDLING

Safety Precautions Normally, for optical fibers with a diameter of 125 um, cleaving, cutting and breaking of the fiber will result in the fiber breaking into 2 pieces. However, for thick, stiff fibers, a fiber break

Safety Procedure copy

Be careful while handling the fibers. Do not stick the broken ends of fiber into your fingers. Do not drop fiber pieces on the floor where they will stick in carpets or shoes and be carried else where like

Fiber Optic Testing and Safety: Creating a Safe Working Environment

It's important for people who install or maintain fiber optic cables to take proper safety precautions. Fiber optics can deliver many hazards an installer must avoid. Although optical fiber doesn't carry

XXII. Fiber Optic Safety Procedures

Fiber Optic Safety Procedures 22A. Introduction This Program provides supervision, employees and safety managers with general safety rules, task safety procedures and best techniques for installation

Safety Procedures for Handling Optical Fiber Cables

Safety Procedures for Handling Optical Fiber Cables - Electric Way Cable installation professionals face safety hazards when they work on optic fiber cables. Even

Fiber Optic Safety Guidelines

The document aims to prevent fiber particles from being ingested or getting into eyes or food, which can cause internal bleeding or splinters. It also mentions keeping

Safety In Fiber Optic Installations

Safety in Fiber Optic Installations Download a safety poster from the FOA! When most people think of safety in fiber optic installations, the first thing that comes to

Storing & Handling Fiber Cable.pub

Proper maintenance is important to the performance of fiber optic cables. This includes handling and storage to keep contaminants away from the connectors and for protection against breaking fiber

5 Vital Safety Rules for Fiber Optic Cables

Learn 5 vital safety procedures when you're working on fiber optics. Hazards to watch for in commercial and industrial networks.

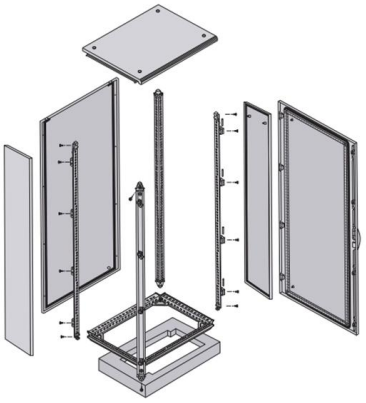

Fiber Optic Safety precautions , HARDWARE , TOOL KITS AND

this document describes the general safety precautions that should be adhered to while working in the Fiber Optic industry. Not all of these admonishments will apply to every situation, but you should be

Fiber Optic Cable: Top 10 Handling

Mistakes to Avoid

Fiber optic cables are delicate and require the same caution as handling fine glassware. By avoiding these common mistakes, you stand to save both time and money, and more importantly,

Fiber Optic Cable: Top 10 Handling Mistakes to Avoid

When handling fiber optic cables, a few simple habits can help you avoid costly mistakes and ensure safe, reliable installations.

The FOA Reference For Fiber Optics

Do not touch your eyes while working with fiber optic systems until your hands have been thoroughly washed. Keep all combustible materials safely away from the

Fiber Optic Safety

These chemicals can be hazardous if not handled properly. Additionally, metal armor on fiber cables can have sharp edges, so always wear protective clothing and

Handling of Optical Fibers and Fiber Optical Rotary Joints

Apart from a broken fiber, contaminated fiber optic cables often lead to degraded fiber optical (FO) performance or even failure of the whole system. As such, to ensure that fiber optic cables or FORJs

Transmission Division

This document provides basic overview and background information for various connector and transceiver types deployed in the network. This document will be useful for the staff engaged in fiber

Inspection and Cleaning Procedures for Fiber-Optic

The procedures in this document describe basic inspection techniques and processes of cleaning for fiber optic cables, bulkheads, and

Precautions taken during the installation of Fiber Optic

In FTTH or Access Network generally Fiber optic cables are most often installed in traditional way manually. In FTTH or Access Network, MH/HH

Top 10 Safety Rules for Fiber Optics

Top 10 Safety Rules for Fiber Optics Fiber optic cables were designed to enhance voice and data communication in many different applications. The flexibility of the technology is extraordinary, and

5 Vital Safety Rules for Fiber Optic Cables

There are plenty of hazards to watch for when working on commercial and industrial networks. Fiber optic cable can seem safe; it doesn't carry an electrical charge, and it's not a heat

The FOA Reference For Fiber Optics

Power cables are always a safety hazard. Although premises cable is called "low voltage" and fiber optic cables are non-conductive, it runs in areas full of power

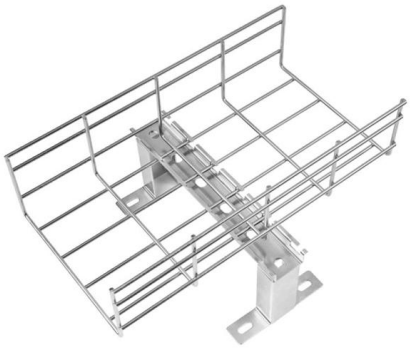

Preventive Maintenance of Fiber Optic Cables and Optics

OF FIBER OPTIC CABLES AND OPTICS cable and the inner surface of an optical module lens surfaces that should be properly cleaned and maintained to reliability and system performance. Small oil micro

XXII. Fiber Optic Safety Procedures

Employees will not bring cosmetics, lip balm, medicine, eye drops, chewing gum, chewing tobacco, hand creams, or lotions in areas where fiber optic cables are being spliced or terminated, or where bare

Working with Fiber Optic Cables: 5 Important Safety Measures

The Top Five Safety Measures of Fiber Optic Cable Work There are a lot more than five essential safety measures that people

Safety Rules For Fiber Optics

If fiber particles are ingested they can cause internal hemorrhaging. Always wear safety glasses with side shields to protect your eyes from fiber shards or splinters. Treat fiber optic splinters the same as

Safety Tips for Fiber Optic Installation and Maintenance

Learn how to ensure safety during fiber optic installation and maintenance, covering personal protective equipment, fiber handling and disposal, laser safety, electrical safety, environmental

Contact Us

For datasheets, pricing, or custom high-speed optical interconnect solutions, please visit:
https://www.syropy.com.pl