Syropy AI Connectivity

OTDR Calibration in Myanmar

OTDR Calibration in Myanmar

OTS Calibration Lab

OTS Calibration Lab is mainly provides Calibration Services. It is located at No. 13, Myothit 1st St., Tamwe .Tsp, Yangon and contact numbers are 09-965951199, 09-977514316.

OTDR

Optical Time Domain Reflectometers (OTDRs) are vital for testing and troubleshooting optical fiber networks. Learn more at Fluke Networks.

Distance Scale Calibration of Optical Time Domain

In this paper calibration of optical time domain reflectometer (OTDR) distance scale using active intensity modulation (AIM) is discussed. A setup is proposed to calibrate an OTDR over a

OTS Calibration Lab

OTS Calibration Laboratory is Myanmar's first & only accredited calibration and repair lab. OTS diverse calibration scopes cover mechanical, dimensional mass & volume, pressure & vacuum for clients

Calibration and use of Optical Time Domain Reflectometers (OTDR).

This document describes the calibration of Optical Time Domain Reflectometers (OTDR). It also describes the principle of their operation and the performance parameters used to specify

Characterization and Calibration of an Optical Time Domain

We report the results of an investigation into the signal characteristics and behavior of an instrument used to calibrate Optical Time Domain Reflectometers.

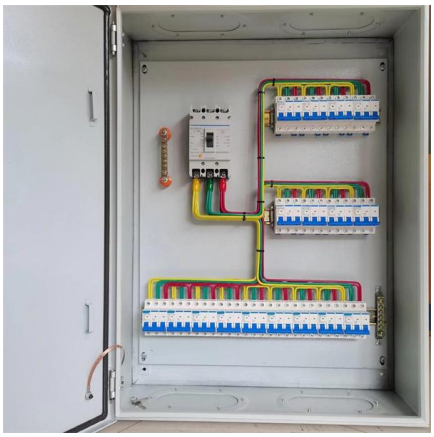

How to Use an OTDR: Complete Guide for Fiber Optic

Introduction An Optical Time Domain Reflectometer (OTDR) is the most powerful tool for characterizing fiber optic networks. It works like "radar for

OTDR

Ensure the accuracy and precision of your optical fiber network with our OTDR calibration and testing service at Swaminarayan Technologies. Our expert

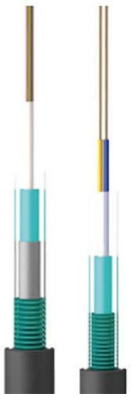

OTDR))QUICK START GUIDE

The optical power meter supports user self-calibration, and the calibration deviation range does not exceed ±10dB. Calibration: Enter the target value and click Save; Restore to default: Clear the

Mastering the OTDR: A comprehensive guide to the Optical Time

Optical Time-Domain Reflectometers (OTDRs) are indispensable tools in the field of optical fiber testing and troubleshooting. These devices allow technicians and engineers to accurately measure the

OTDR CALmRATION

3. OTDR calibration OTDRs are able to make measurement from one access point. Consequently they are used in a wide variety of applications like fibre length determination, fibre characterization, optical

Optical Time Domain Reflectometer

1 Introducing the OTDR joined by splices and connectors. The optical time domain reflectometer (OTDR) provides an inside view of the fiber, and can calculate fiber length, attenuation, breaks, total return

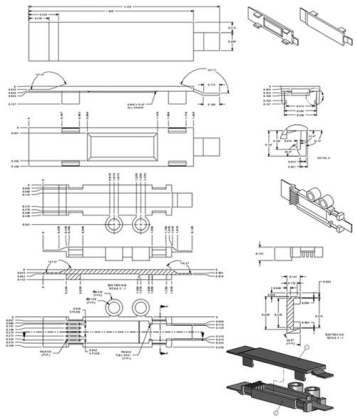

OTS Calibration Lab-Myanmar

OTS Calibration Laboratory is Myanmar first & only accredited calibration and repair lab. OTS diverse calibration

How to Set Up and Calibrate an OTDR , CMW Guide

Learn how to correctly set up and calibrate an Optical Time Domain Reflectometer (OTDR) for optimal performance. CMW provides expert insights and tips for the best results.

OTS : First Accredited Calibration Lab in Myanmar

OTS Calibration Laboratory is Myanmar's first accredited calibration and repair lab. OTS diverse calibration scopes cover mechanical, dimensional mass & volume, pressure & vacuum for clients

OTDR photometer Calibration Service

Distributor of OTDR photometer Calibration Service YOKOGAWA, Fibretool, JDSU, Fluke Network, SKYCOM, Promax, ANRITSU

?OTS Calibration Lab -- Other business entity from Myanmar,

Calibration services are an important solution for ensuring reliable measurement from the measuring tools and equipment used at your facility. The calibration process entails inspecting, verifying, and,

What is an Optical Time-Domain Reflectometer (OTDR)

Discover how an Optical Time-Domain Reflectometer (OTDR) works, its applications in fiber optic network testing, troubleshooting, maintenance, and

OTDR Testing Solutions , EXFO

An OTDR trace is a graphical representation of power and distance of all elements of the optical fiber. Once saved, OTDR results can be used to reference the link for future testing. When to use an

Optical Time-Domain Reflectrometer (OTDR) calibration

The OTDR calibration service complements our existing test and measurement services within optical fibre technology, such as wavelength measurement of OTDR internal laser sources and calibration of

How to Ensure Your OTDR Tests Meet Industry Standards , CMW

Ensuring that your OTDR (Optical Time Domain Reflectometer) tests meet industry standards is crucial for delivering accurate and reliable results. You can confidently ensure your tests

SKYCOM OTDR Meter Calibration Service

EMIN Vietnam Joint Stock Company is pleased to provide customers with SKYCOM OTDR Metercalibration services.

OTDR Testing. The Best OTDR Test Equipment & Procedures

OTDR Testing Terminology Power on the OTDR and verify the battery is charged and the test display is functioning. Clean and inspect the ends of all fibers under test, launch cables, connectors, and

OTS Calibration Lab-Myanmar

OTS Calibration Laboratory is Myanmar's first & only accredited calibration and repair lab. OTS diverse calibration scopes cover mechanical, dimensional mass & volume, pressure & vacuum

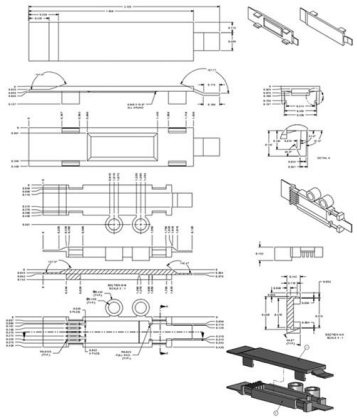

EMIN .MM , EMIN Myanmar

Leading supplier of testing and measuring equipment in Myanmar, offering a wide range of high-quality products for various industries.

Microsoft Word

We also describe the measurement method and associated uncertainty analysis used to calibrate optical fiber delay lines employed in the calibration of the OTDR calibrator.

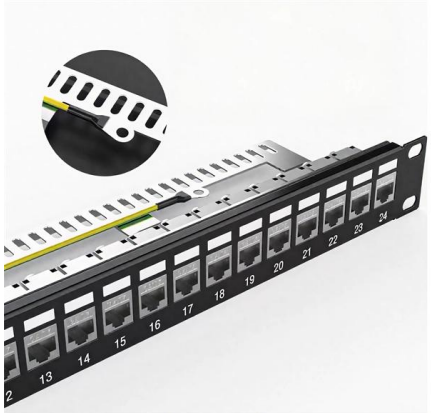

Company Profile

OTS Calibration Laboratory is Myanmar's first accredited calibration and repair lab. OTS diverse calibration scopes cover mechanical, dimensional mass & volume, pressure& vacuum calibrations

Evaluation of OTDR calibration technique

and test method for optical

Having prepared the calibration artefact, it will be circulated along with a uniform and non-uniform fibre on which a range of measurements will be made. Comparison and analysis of these

Contact Us

For datasheets, pricing, or custom high-speed optical interconnect solutions, please visit:
https://www.syropy.com.pl