Syropy AI Connectivity

Maintenance of 800G Optical Module QSFP28

Maintenance of 800G Optical Module QSFP28

Pluggable Optical Module Market Research Report 2034

The pluggable optical module market was valued at $9.8 billion in 2025 and is projected to reach $26.4 billion by 2034, growing at a CAGR of 11.6%.

Optical Transceivers MSA Standards Technical Guide

Among these, 40G QSFP+ and 100G QSFP28 became dominant, driven by superior power efficiency, density, and scalability. Hyperscale Era: Open Ecosystems & Rapid Innovation (2015-Present) From

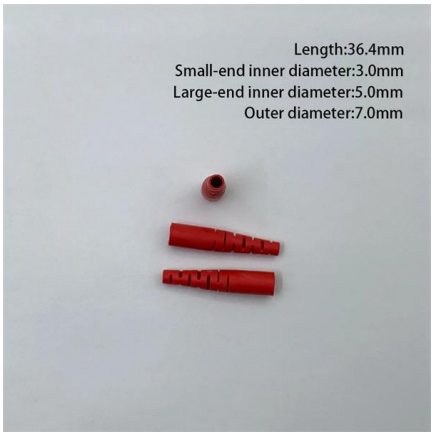

2025 Optical Module Market Share and Demand Report

The 2025 optical communication industry is driven by AI data centers (AIDCs) and 5G rollouts, with high-speed optical modules (400G/800G/1.6T)

Complete Guide to QSFP-DD, QSFP28, QSFP56,

Complete Guide to QSFP-DD, QSFP28, QSFP56, SFP56, and SFP28 Optical Modules As high-speed networks continue to evolve, optical transceivers like

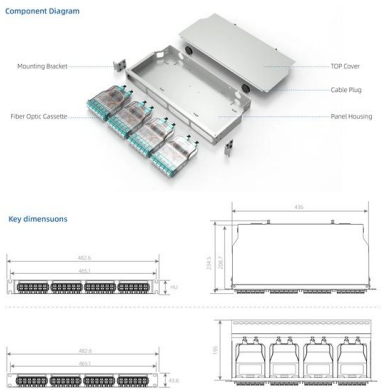

QSFP28 Transceiver: Complete 100G Connectivity Guide (2026)

QSFP28 transceiver guide covering module types, pricing, compatibility, and deployment. Learn how to choose, deploy, and troubleshoot 100G QSFP28 optics.

The Ultimate Guide to SFP, SFP+, SFP28, QSFP+, and QSFP28:

QSFP28 modules integrate four high-speed lanes in a compact form factor, typically consuming 4.5-6W. Insufficient airflow and high port density are the primary causes of thermal

800G QSFP-DD Cable and Transceiver Modules Data Sheet

The OSFP-DR8-800G supports link lengths of up to 500m over a standard pair of G.652 single-mode fiber via dual MTP/MPO-12 connectors. It complies with the IEEE 802.3ck, OSFP MSA

Complete Guide to QSFP-DD, QSFP28, QSFP56,

Whether you're scaling up a data center or deploying edge connectivity for telecom, selecting the right optical transceiver is crucial. Understanding the specifications

Full Range of 1G-800G SFP Modules Available Online

Explore a full range of 1G-800G SFP modules online, including SFP, SFP+, SFP28, QSFP+, QSFP28 and QSFP-DD optical transceivers with reliable compatibility.

How to Choose the Right Optical Transceiver Module

Learn how to select the ideal optical transceiver module based on speed, fiber type, compatibility, and real deployment scenarios. Includes expert recommendations and trusted Cisco

Dell networking transceivers and cables

100GbE QSFP28 ports support both optical and passive copper breakout cables. Each of the four 25 GbE lanes can be broken out into four individual SFP28 interfaces. This solution can be deployed

Optical Modules Market Research Report 2034

Optical Modules Market Outlook 2025-2034 The global optical modules market was valued at $14.8 billion in 2025 and is projected to reach $39.6 billion by 2034,

Optical Module Market Analysis and Forecast in 2026

AI computing power has driven explosive growth in the optical module market, with 800G and 1.6T technologies leading the industry transformation.

800G Client Optics in the Data Center

The next key development is 800G, and the industry is already gearing up to deploy this next generation of client optics in hyperscale data centers. Developments in three distinct areas are needed for 800G

Introduction to 800G Optical Module

Selecting the appropriate 800G optical module for your network involves considering several key factors, including package type, distance, single mode or multimode fiber, power

QSFP28 100G AOC high-speed interconnection optical cable

The QSFP28 connectors at both ends are precision-coupled at the factory, eliminating the need for users to purchase separate optical modules or patch cords. It offers true plug-and-play functionality,

100GE QSFP28 Optical Modules

100GE QSFP28 Optical Modules QSFP-100G-4WDM-40 QSFP-100G-CWDM4 QSFP-100G-CWDM4-Lite QSFP-100G-ER4 QSFP-100G-SWDM4 QSFP28-100G-1310-40km-SM QSFP28-100G-DR

800G Optical Modules Explained: Standards, Types

We will explore the emergence, technical standards, packaging, types, and applications of 800G modules, and answer common questions to help you

Eoptolink

Eoptolink - market leader in high speed optical transceivers: 800G QSFP-DD800 & OSFP, 400G QSFP56-DD, QSFP112, OSFP, 200G QSFP56 and QSFP-DD, 100G single lambda QSFP28 and

200G Modules

GIGALIGHT offers 10G to 800G rates immersion pluggable optical modules with SFP+,SFP28,QSFP+,QSFP28,QSFP56,OSFP-RHS,QSFP112,QSFP-DD and OSFP

100G Optics: Which Standards Are Next?

This blog post contextualizes the use of 100G optics in modern networks and explains why 100G technology continues to be developed, even in the presence of modern 400G and 800G optics.

What Is QSFP28? A Clear Explanation of 100G Transceivers

Learn what QSFP28 is, how 100G transceivers work, key standards, module types, and common deployment scenarios in modern data center networks.

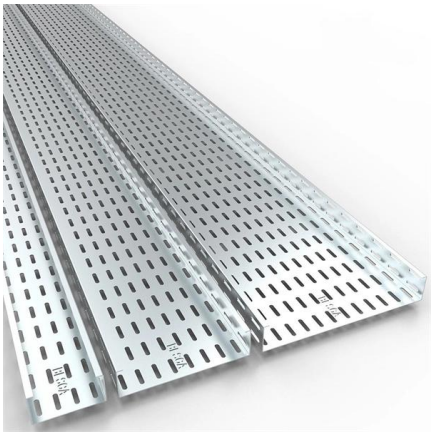

800G Client Optics in the Data Center

Developments in three distinct areas are needed for 800G deployment: optical modules and direct attach copper (DAC) cables, switch ASICs, and 800GE standardization. Not all these need to be fully

QSFP28 optical transceivers , Smartoptics

This setup aggregates four or eight 100G QSFP28 connections into a single 400G or 800G uplink using QSFP-DD or OSFP ports, enabling high-bandwidth scaling for

Optical Transceivers / SFP Modules - High-Performance Compatible

Comprehensive Optical Transceivers & SFP Module for High-Speed Networks LINK-PP offers a full range of optical transceivers and SFP module for modern data centers, telecom networks, and

Juniper 800G Optical Transceivers and Cables Guide

About This Guide Use this guide to learn about the Juniper Networks® 800G optical transceivers and cables, their specifications, and how to install, remove, and maintain these

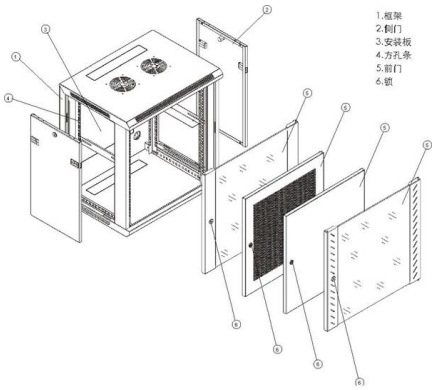

Optical Transceivers , Fiber Optic Transceivers , Form

800G OSFP Optical Modules for High-Speed Ethernet Links Designed for 800Gb/s data rate links, these OSFP optical modules support 106.25Gb/s per

Custom 40G QSFP+ and 50G SFP56/QSFP28 Modules

WolonFiber manufactures strictly MSA-compliant 40G QSFP+, 50G SFP56, and 50G QSFP28 optical interconnects optimized for mission-critical telecommunications and campus deployments.

Advanced Connectivity: The Evolution of 800G QSFP-DD DR8 MPO

Discover the details of Advanced Connectivity: The Evolution of 800G QSFP-DD DR8 MPO Transceiver Modules in AI Data Centers at LonRise Equipment Co. Ltd., a leading supplier in

Contact Us

For datasheets, pricing, or custom high-speed optical interconnect solutions, please visit:
https://www.syropy.com.pl