Syropy AI Connectivity

# Design of a 160 UPS Uninterruptible Power Supply System

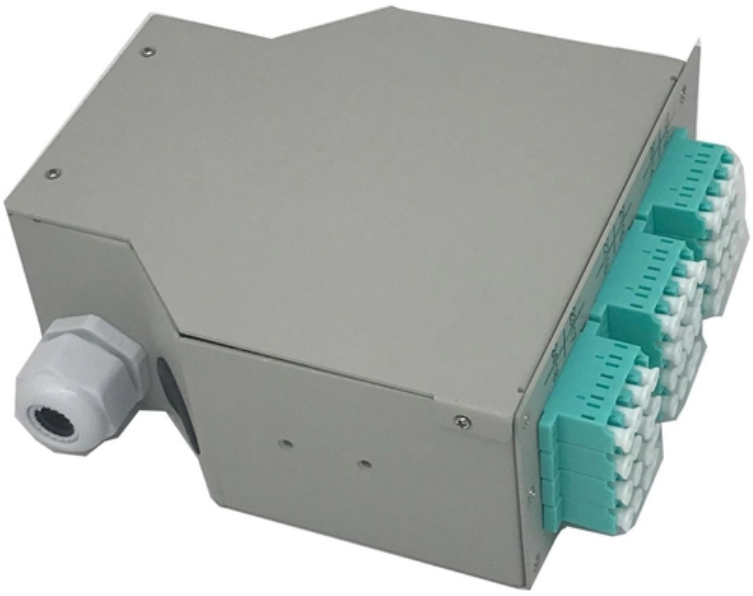

# Design of a 160 UPS Uninterruptible Power Supply System

**APC by Schneider Electric**

APC by Schneider Electric (formerly American Power Conversion Corporation) is a manufacturer of uninterruptible power supplies (UPS), electronics peripherals,

**Design of an Uninterruptible Power Supply (UPS)**

An uninterruptible power supply, commonly called a UPS is a device that has the ability to convert and control direct current (DC) energy to alternating current (AC) energy.

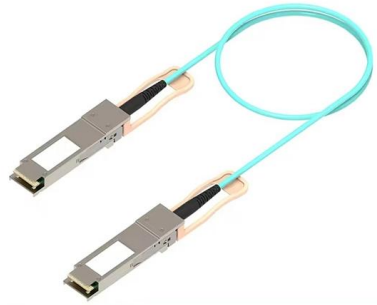

**Uninterrupted Resilience: Backup UPS Uninterruptible Power Supply**

Explore the critical role of UPS systems in safeguarding digital infrastructure and manufacturing processes from power fluctuations and outages. BriefingWire , 5/08/2026 - The reliance on

**Industrial UPS with 0ms Transfer & 40kva-120kva Capacity**

Reliable low frequency industrial UPS with 0ms transfer time, 40kva-120kva capacity, and sealed free maintenance battery for continuous power supply.

**Review: Uninterruptible Power Supply (UPS) system**

This paper provides comprehensive review of UPS topologies, circuit configurations, and different control techniques used in the UPS system. A comparison based on the performance, size,

**AI Data Center Boom Rewires US Power Supply Chain**

AI Data Center Boom Rewires US Power Supply Chain Rising demand for electrical equipment drives supply growth, but hyperscale construction accelerates and infrastructure

**8 Best UPS for Gaming PC (May 2026) Tested**

When power returned, my save file was corrupted and my SSD showed warning signs of potential failure. That $200 investment in a quality uninterruptible power supply would have saved

**Uninterruptible power supplies Wien**

Uninterruptible Power Supplies Supplier Types and Capabilities Industrial-Scale UPS Suppliers act as the backbone of critical infrastructure, much like a lighthouse guiding ships through storms.

**Battery technologies for grid-scale energy storage**

Uninterruptible power supply systems Devices that provide backup power and ensure continuous electricity supply to connected equipment during power outages or fluctuations.

**Design of An Uninterruptible Power Supply (UPS) , PDF**

The document presents a project report on the design and implementation of an Uninterruptible Power Supply (UPS) system, authored by Lua'i J.A. Zatari and

**Kohler Uninterruptible Power announces Engineers Ireland Registered**

Kohler Uninterruptible Power (KUP) now has an Engineers Ireland Registered Training Provider, offering electrical engineers in Ireland CPD-approved face-to-face training courses and

**Uninterruptible Power Supply Design: Ensuring Flawless**

To ensure a robust and efficient UPS system, adhering to best practices during the Uninterruptible Power Supply Design process is essential. These guidelines can

**Uninterruptible Power Supply - UPS Systems & Power Backup**

With a range of UPS systems for all types of applications from home and domestic to heavy industry and medical uses, find the UPS power supply you require.

**Accelerating nuclear-integrated data center pursuits in the USA:**

The study highlights the importance of N + 1/N + 2 power supplies (where N is the required number of units), outlines research and innovations in nuclear-integrated data center thermal

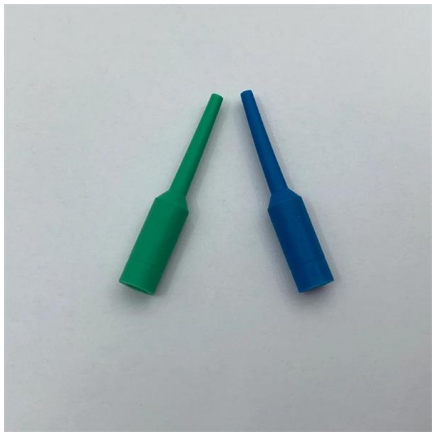

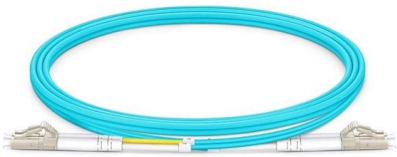

**Eaton/Power Quality 9PX1500RT UPS System, 2U, 1500VA, 1350W,**

Reliable Power Protection for Your Business-Critical Equipment: Eaton 9PX1500RT UPSPeace of mind knowing your electronics are safeguarded from power surges and outages.The Eaton 9PX1500RT

**DESIGN AND CONSTRUCTION OF UNINTERRUPTIBLE POWER**

The human desire to have a steady power supply for domestic and industrial purposes gave rise to an uninterrupted Power supply (UPS). Globally, the need and demand for computers, electronics, and

**Phoenix Contact 2907071 Power**

Phoenix Contact QUINT DC-UPS Series - Uninterruptible Power Supplies with IQ Technology:The intelligent QUINT UPS for integration into established industrial

**Uninterruptible power supply systems**

ABB, as one of the leading suppliers of UPS, has invested much effort in developing and refining a UPS design that optimizes availability and total cost of ownership. ABB's unique UPS design is based on

**1200 V Silicon Carbide MOSFETs , Infineon Technologies**

Overview Infineon 1200 V CoolSiC(TM) Silicon Carbide MOSFET discretes and modules were especially developed for applications such as Photovoltaic, Energy Storage, EV-Charging, UPS, Industrial

**Eaton UPS fundamentals handbook**

From plug and receptacle charts and facts about power problems to an overview of various UPS topologies and factors affecting battery life, you'll find a wealth of pertinent resources designed to

**uninterruptible power supply ups battery backup philippines**

Find reliable UPS battery backup solutions in the Philippines. Compare top-rated suppliers, prices, and features. Click to explore trusted options for home & office power protection in 2026.

**Uninterruptible Power Supply Company , Industrial**

DC Group is a leading UPS service center and uninterruptible power supply company, offering reliable industrial uninterrupted power supply solutions.

**UPS Power System Design Parameters , Asia Power Quality Initiative**

This application note is intended to be a source of guidance and to help reduce confusion pertaining to the design, configuration, selection, sizing, and installation of Uninterruptible Power

**Buy Uninterruptible Power Supply (UPS) - All categories , Catalog**

Order Uninterruptible Power Supply (UPS) (All categories) at competitive prices. Fast delivery starting from 24 hours, secure payments, and up to 2-year warranty. Made in the EU.

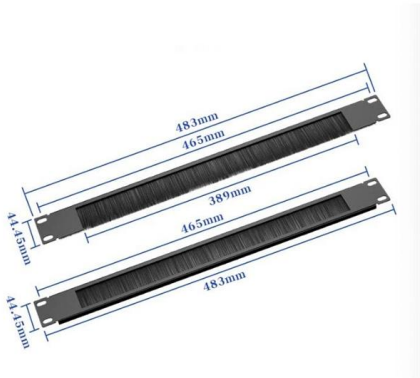

**Uninterruptible Power Supply UPS Design Notes**

There are five main typical UPS system design configurations that distribute power to the critical loads. The selection of the appropriate configuration for a particular

**Uninterruptible power supply design resources , TI**

View the TI Uninterruptible power supply block diagram, product recommendations, reference designs and start designing.

**Uninterruptible Power Supply Design: Ensuring Flawless**

Conclusion The importance of Uninterruptible Power Supply Design lies in its ability to safeguard operations, protect sensitive equipment, and minimize downtime.

**UPS**

Uninterruptible Power Supply (UPS)
Uninterruptible Power Supply by Schneider Electric India - an eminent innovative and technology-driven company,

## Contact Us

For datasheets, pricing, or custom high-speed optical interconnect solutions, please visit:
https://www.syropy.com.pl